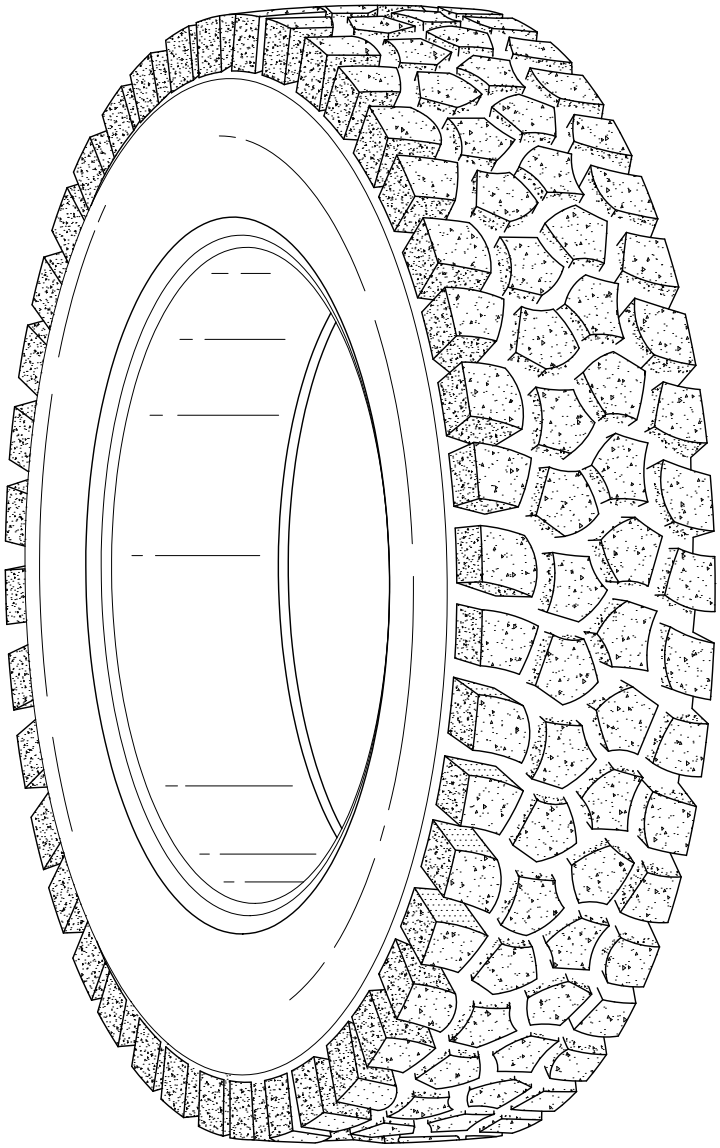

Perspective View

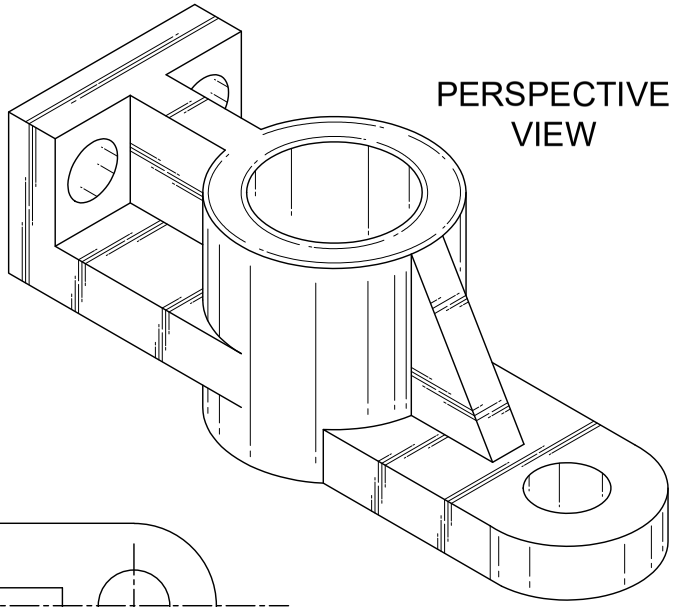

PERSPECTIVE VIEW

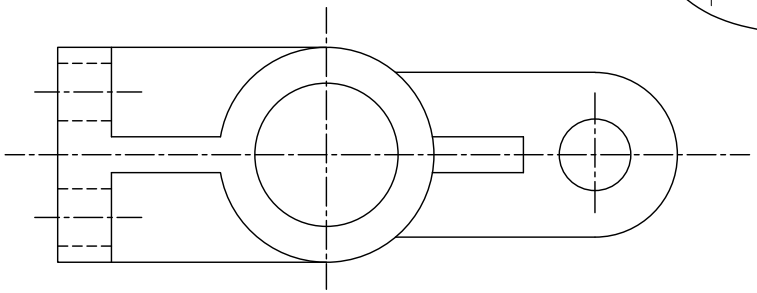

TOP SIDE

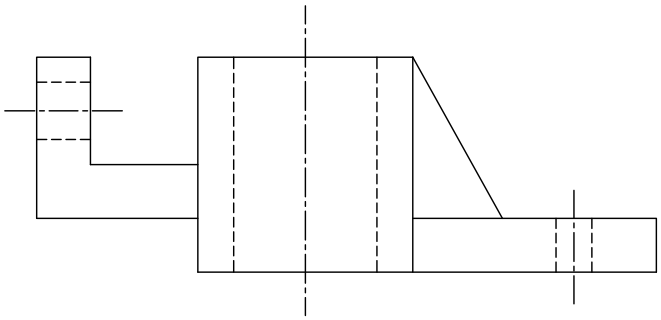

RIGHT SIDE

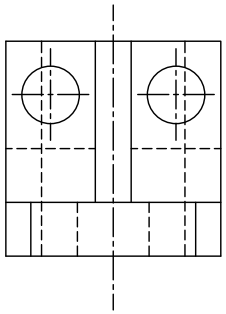

FRONT SIDE

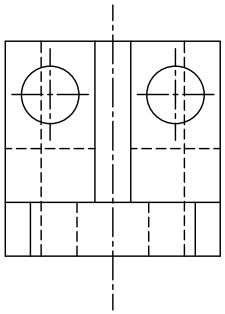

FRONT SIDE

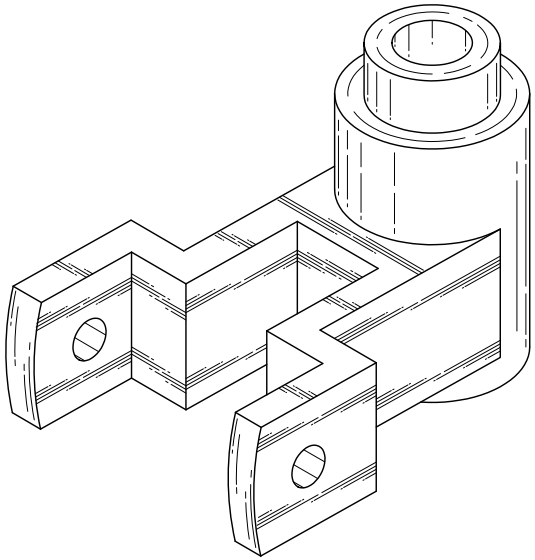

PERSPECTIVE VIEW

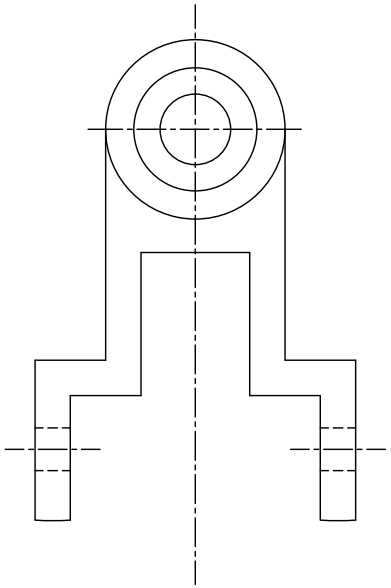

TOP SIDE

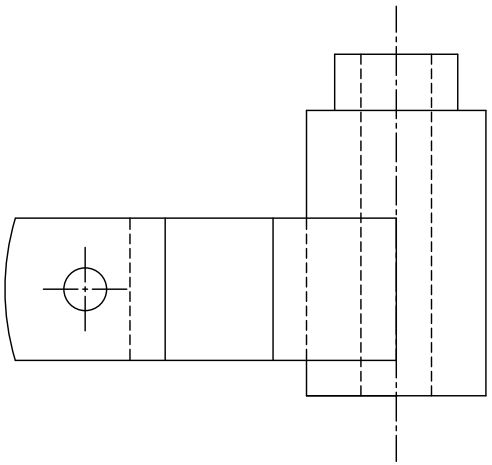

RIGHT SIDE

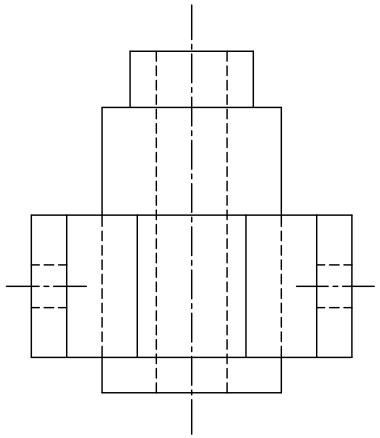

FRONT SIDE

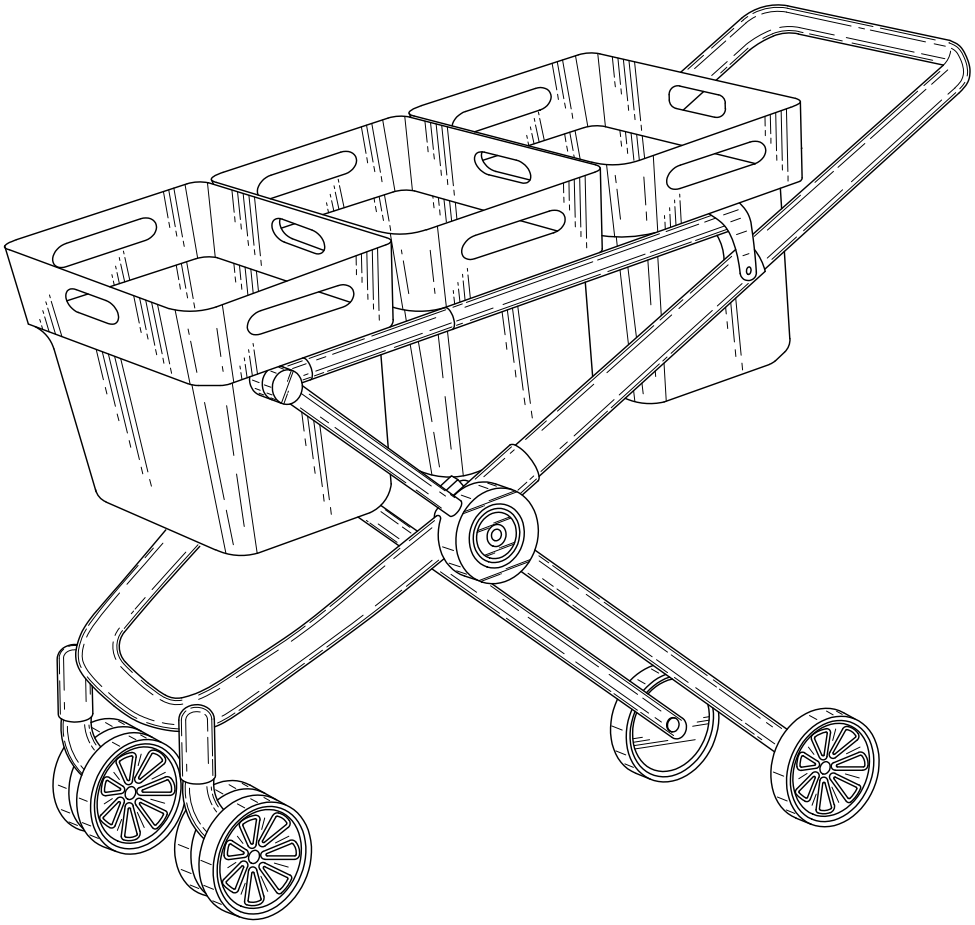

Perspective View

Perspective View

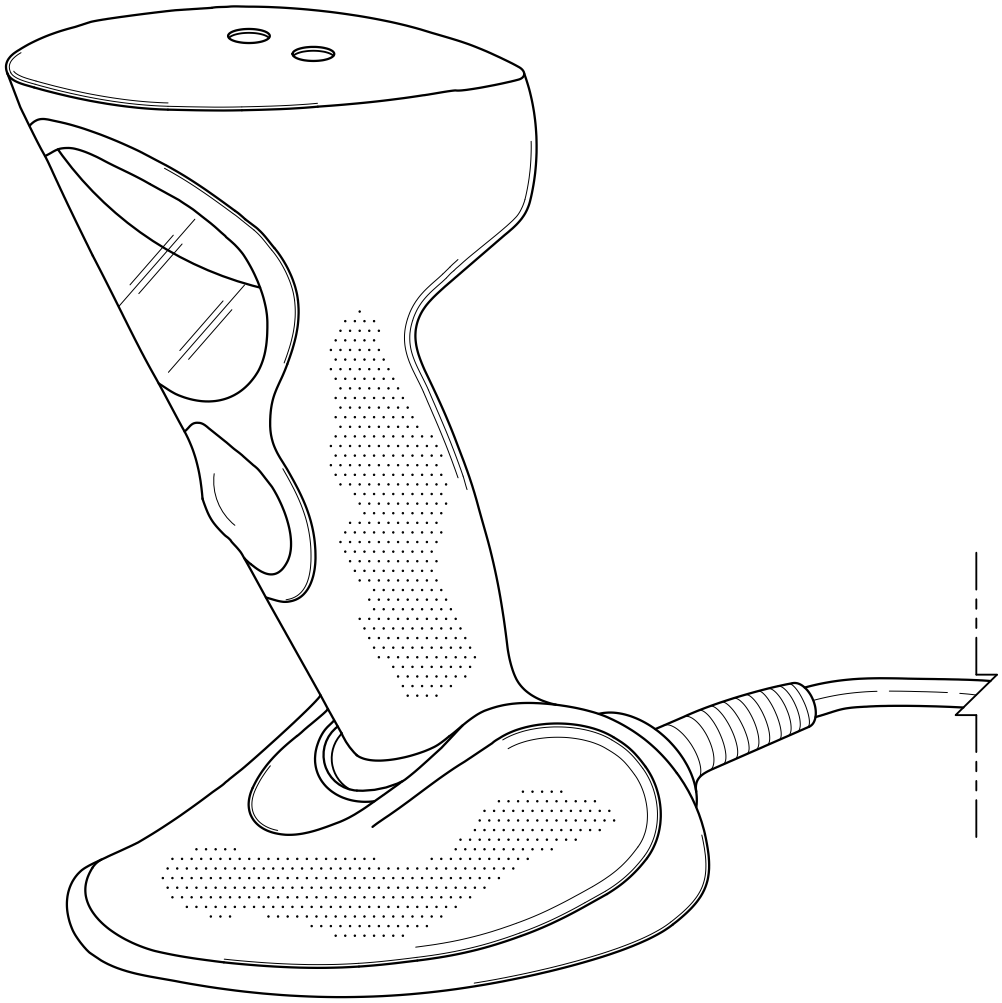

Perspective View

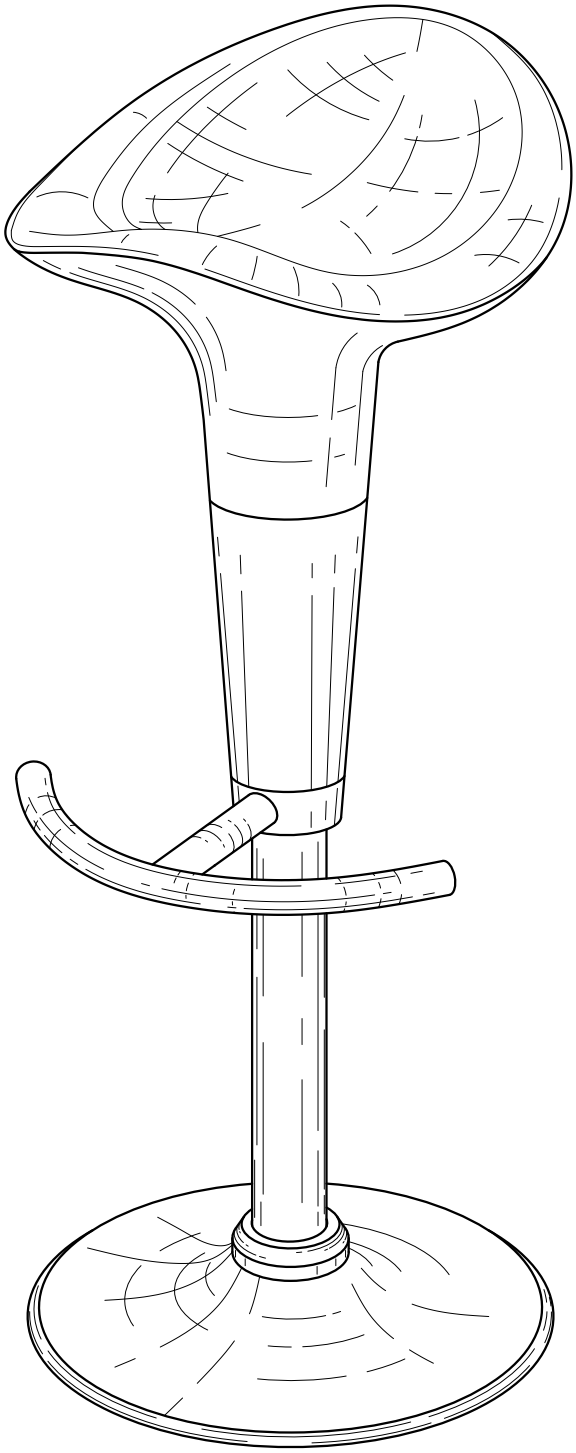

Perspective View

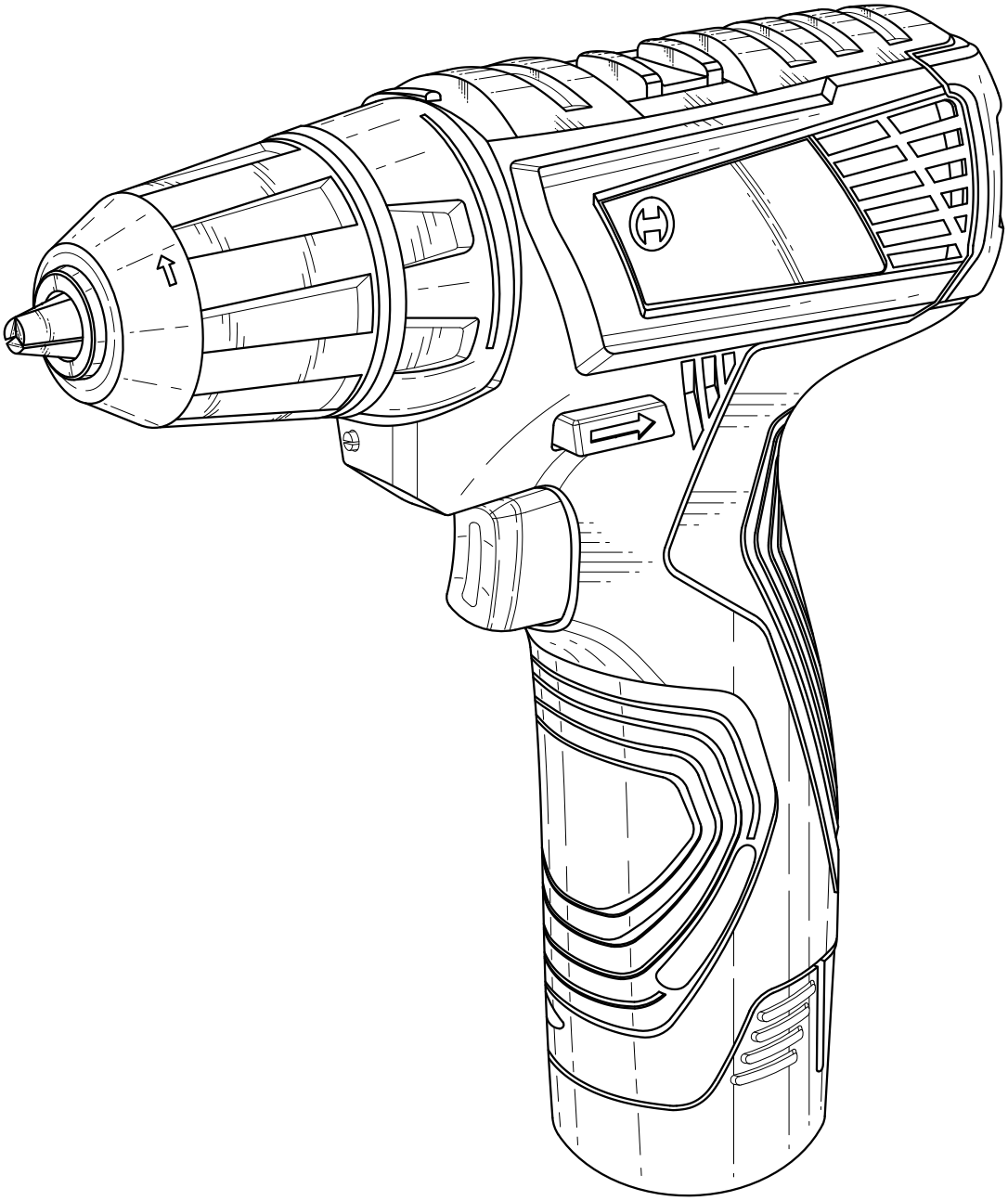

Perspective View

Design Patents Drawings

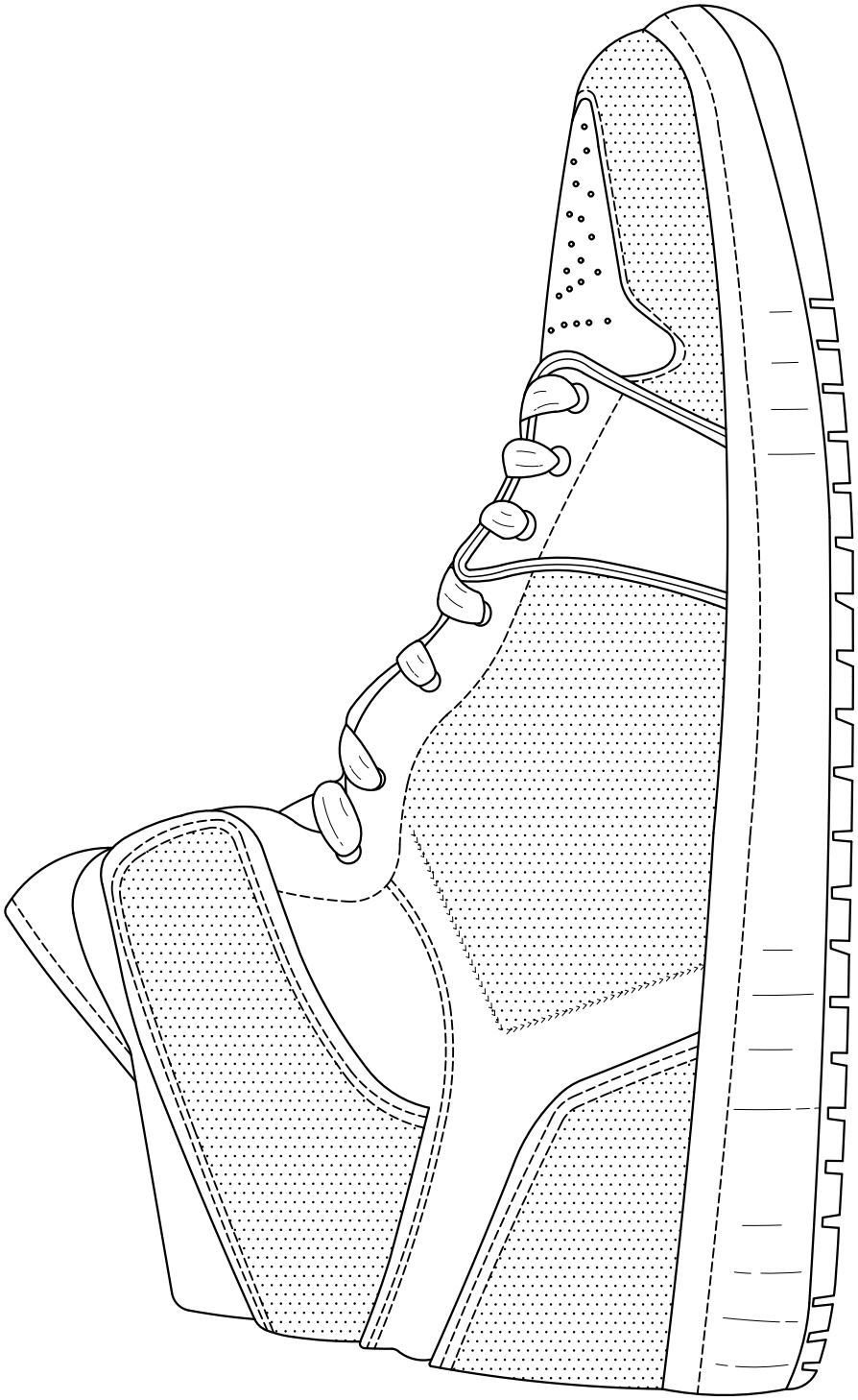

FIG. 1

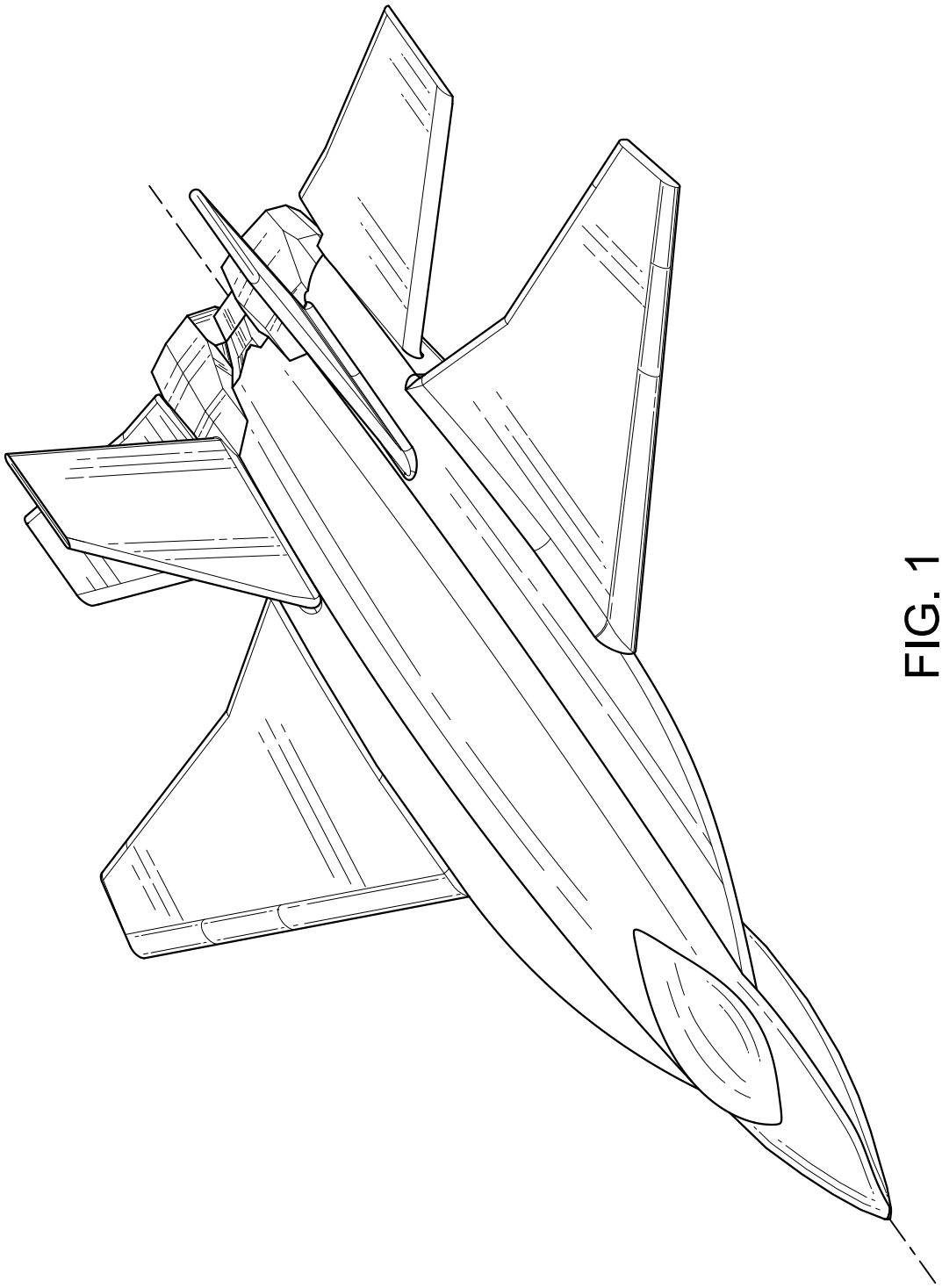

FIG. 1

FIG. 1

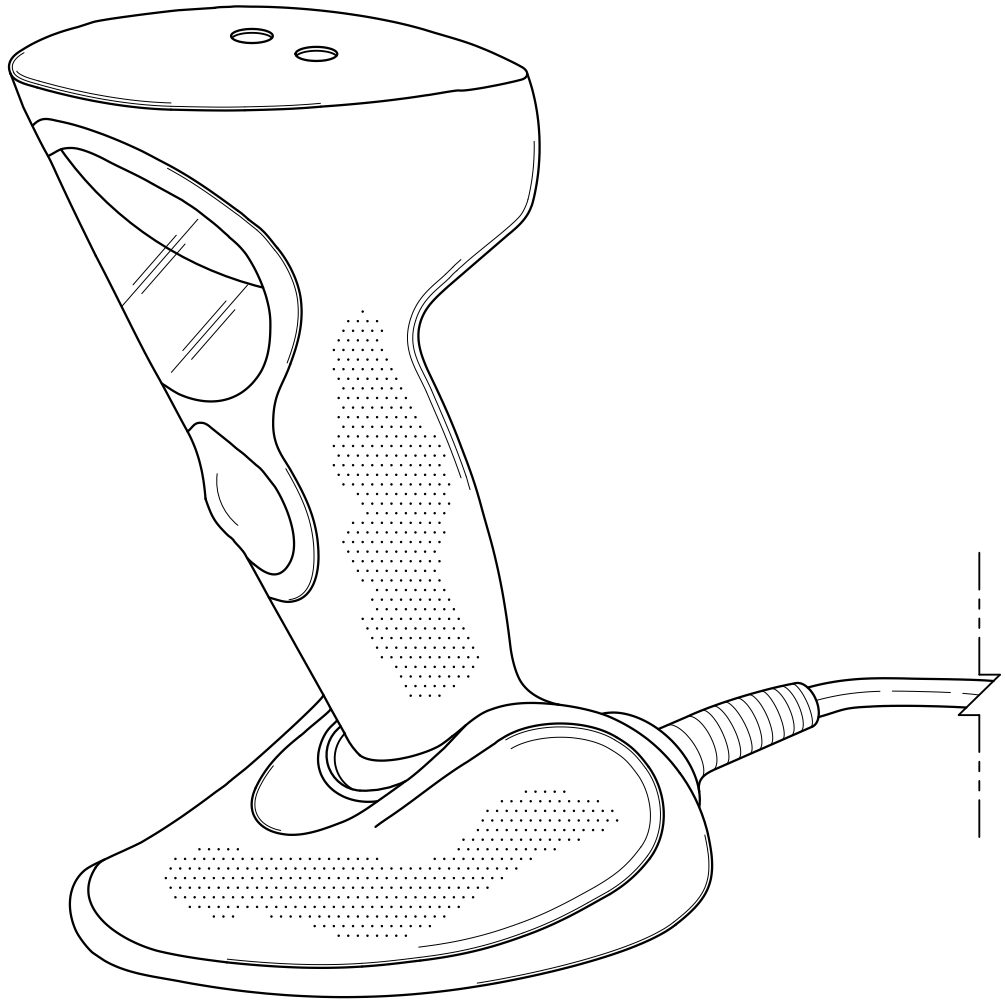

FIG. 1

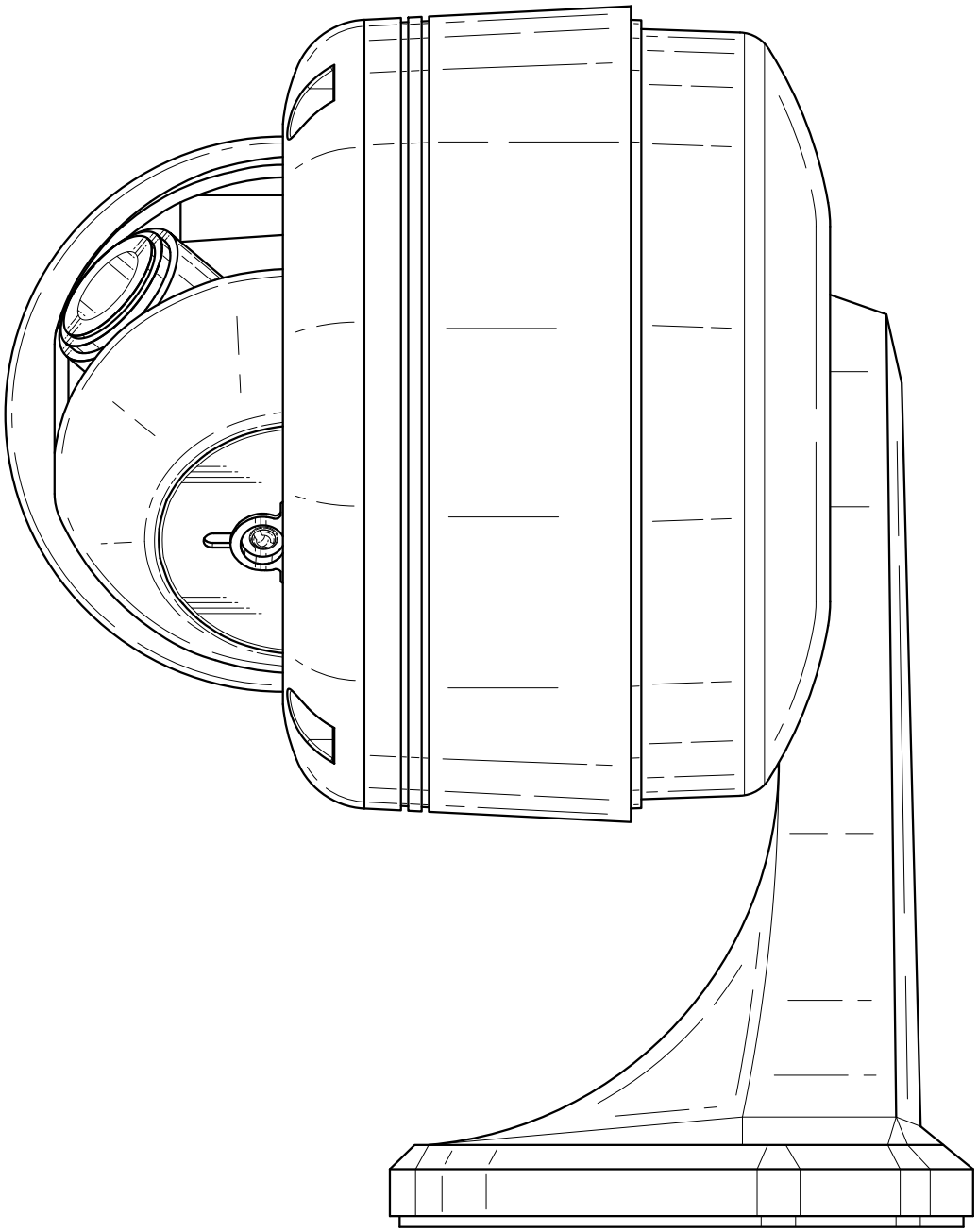

FIG. 1

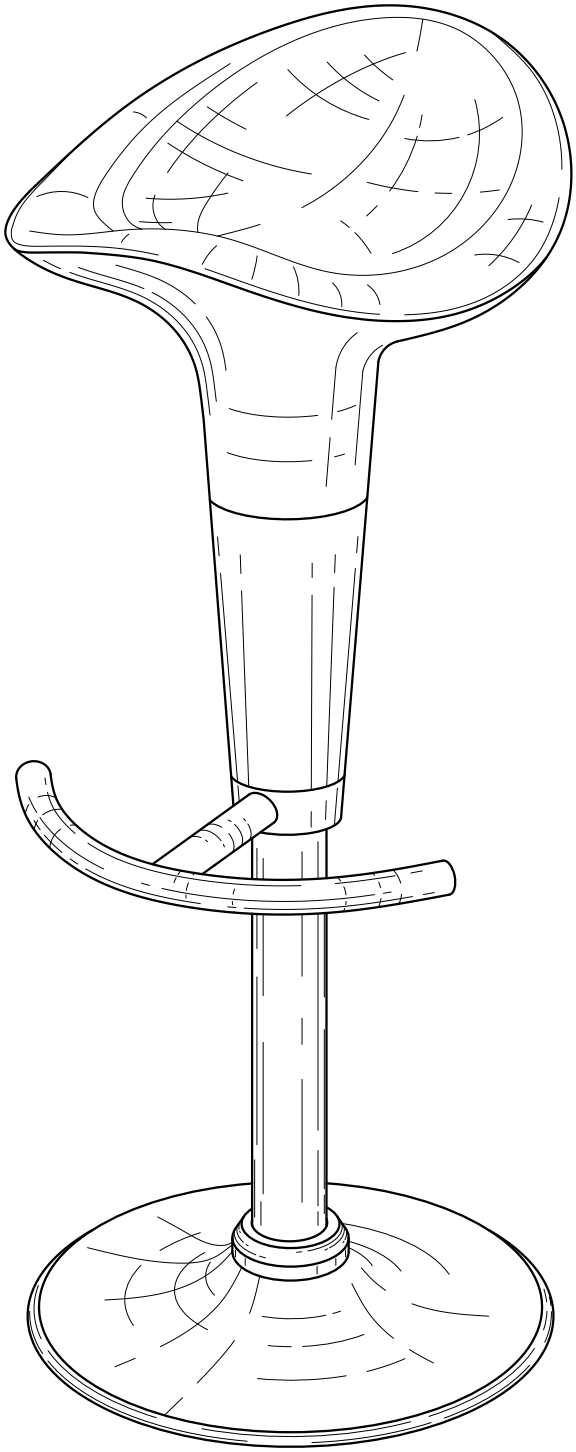

FIG. 1

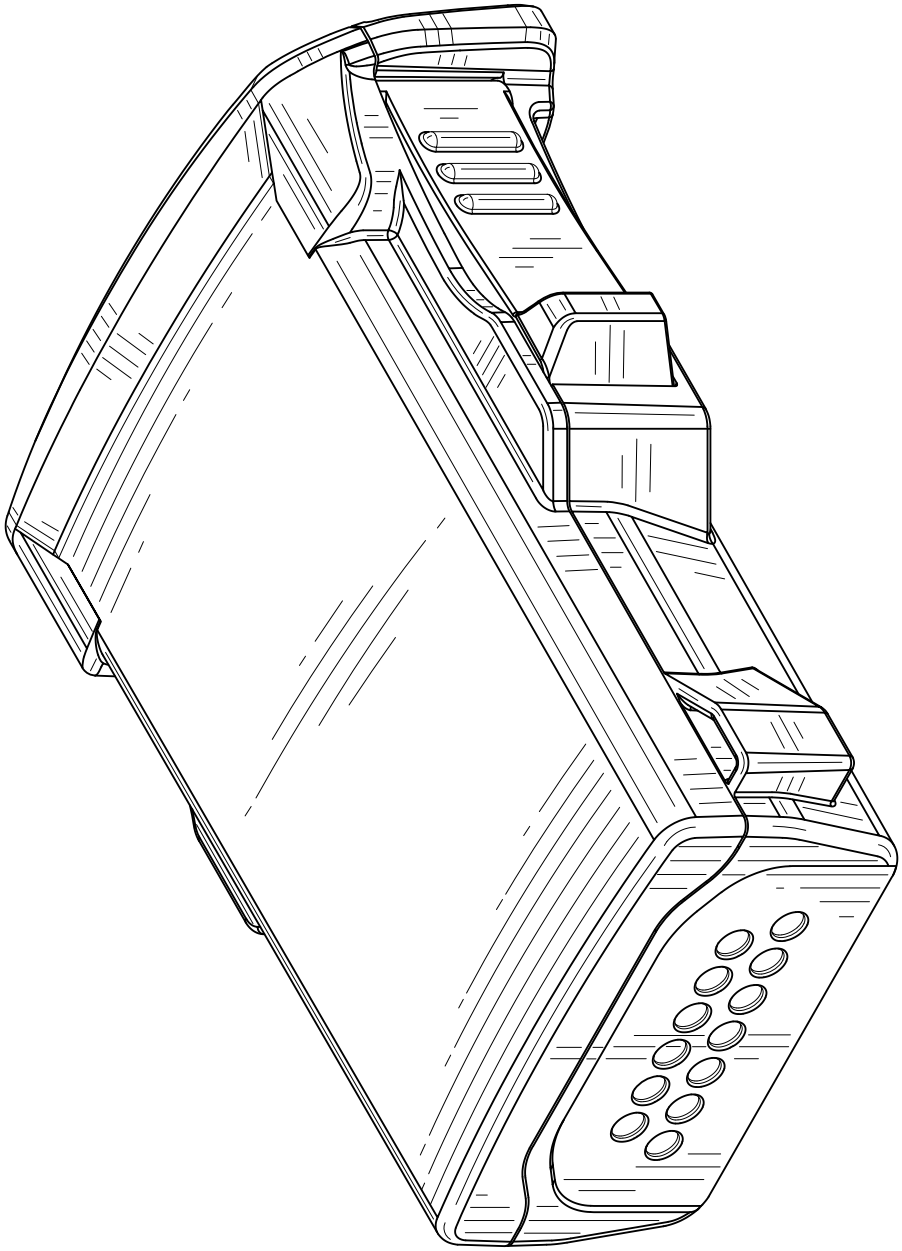

FIG. 1

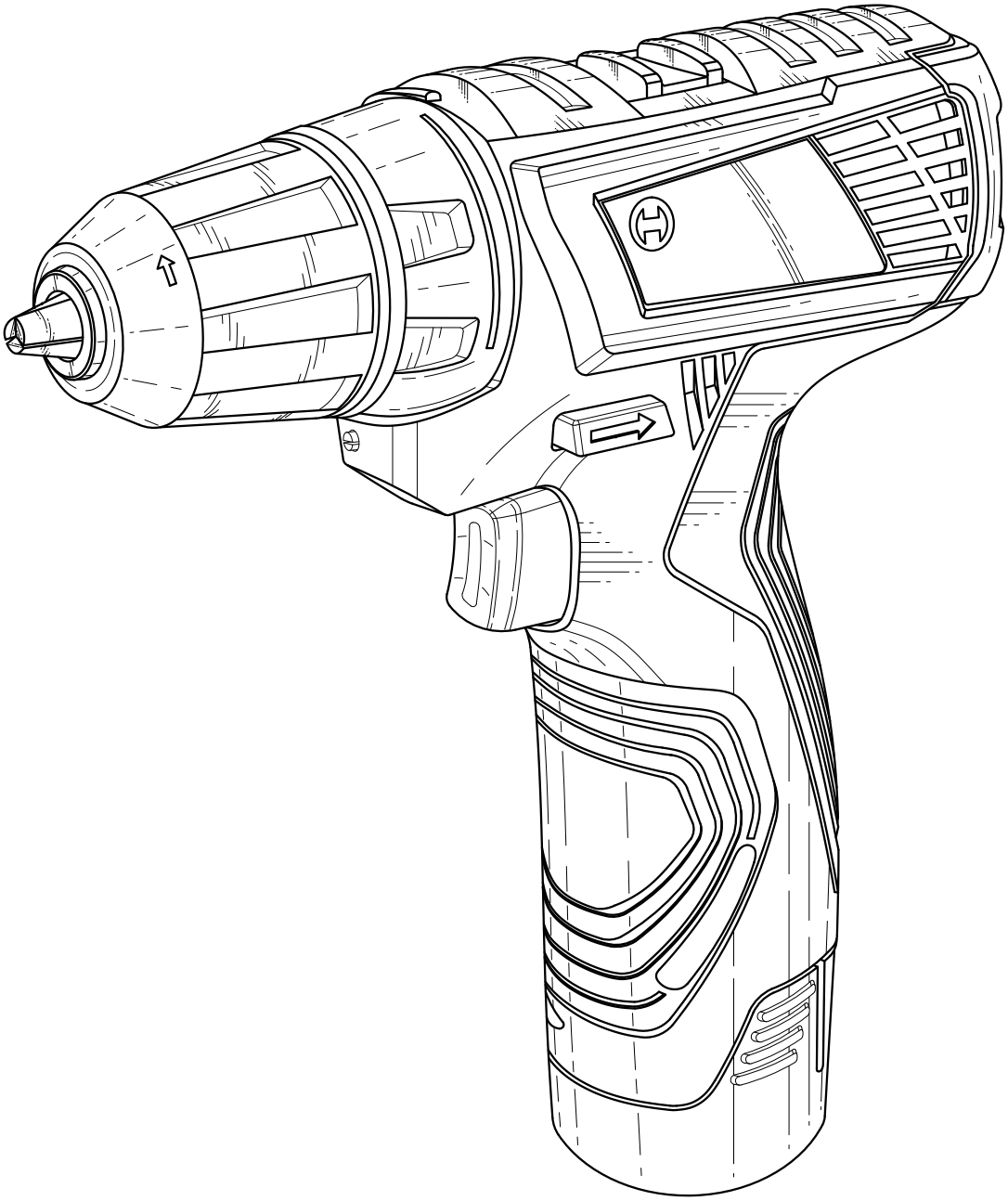

FIG. 1

Utility Patent Drawings

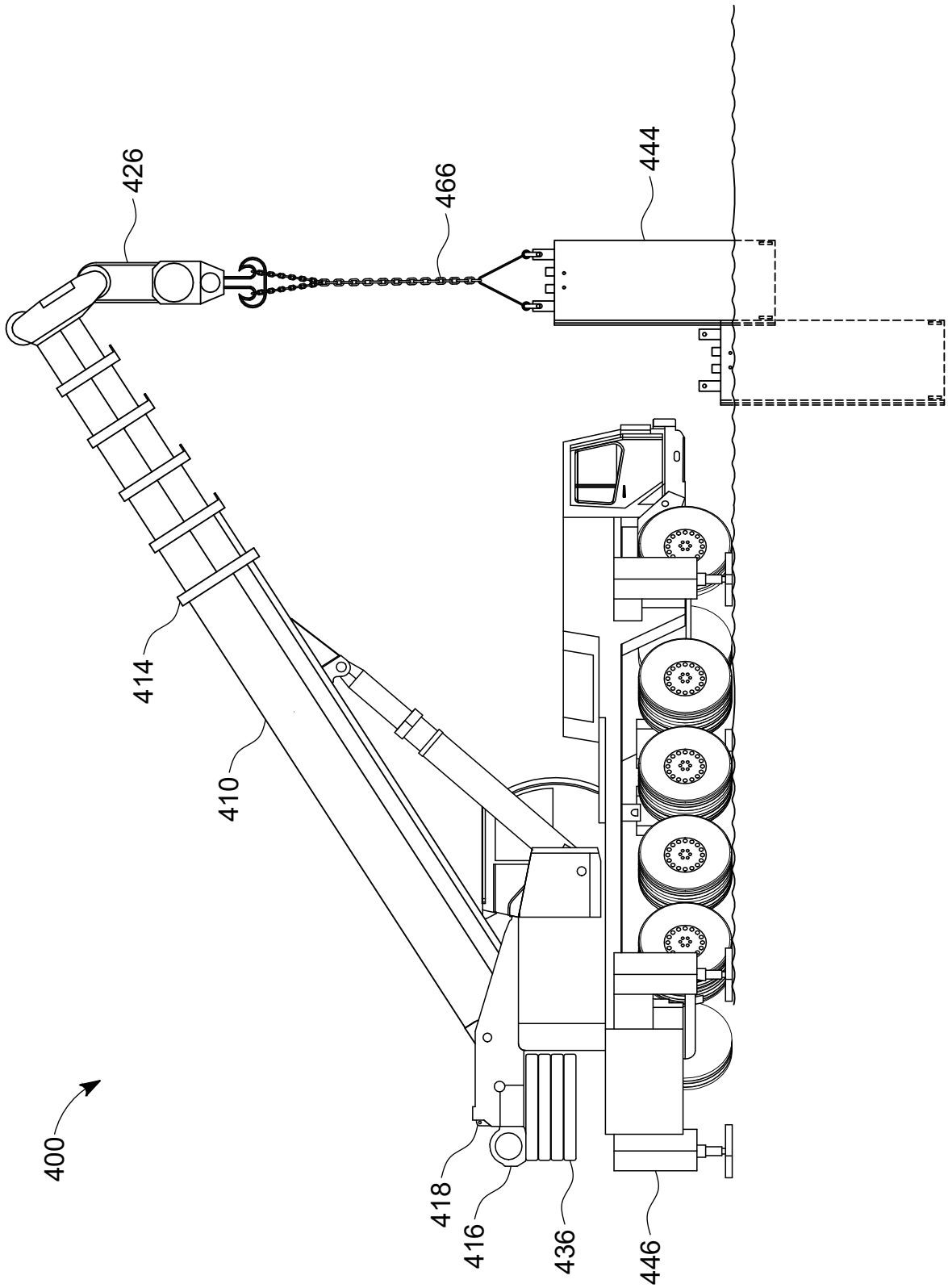

FIG. 1

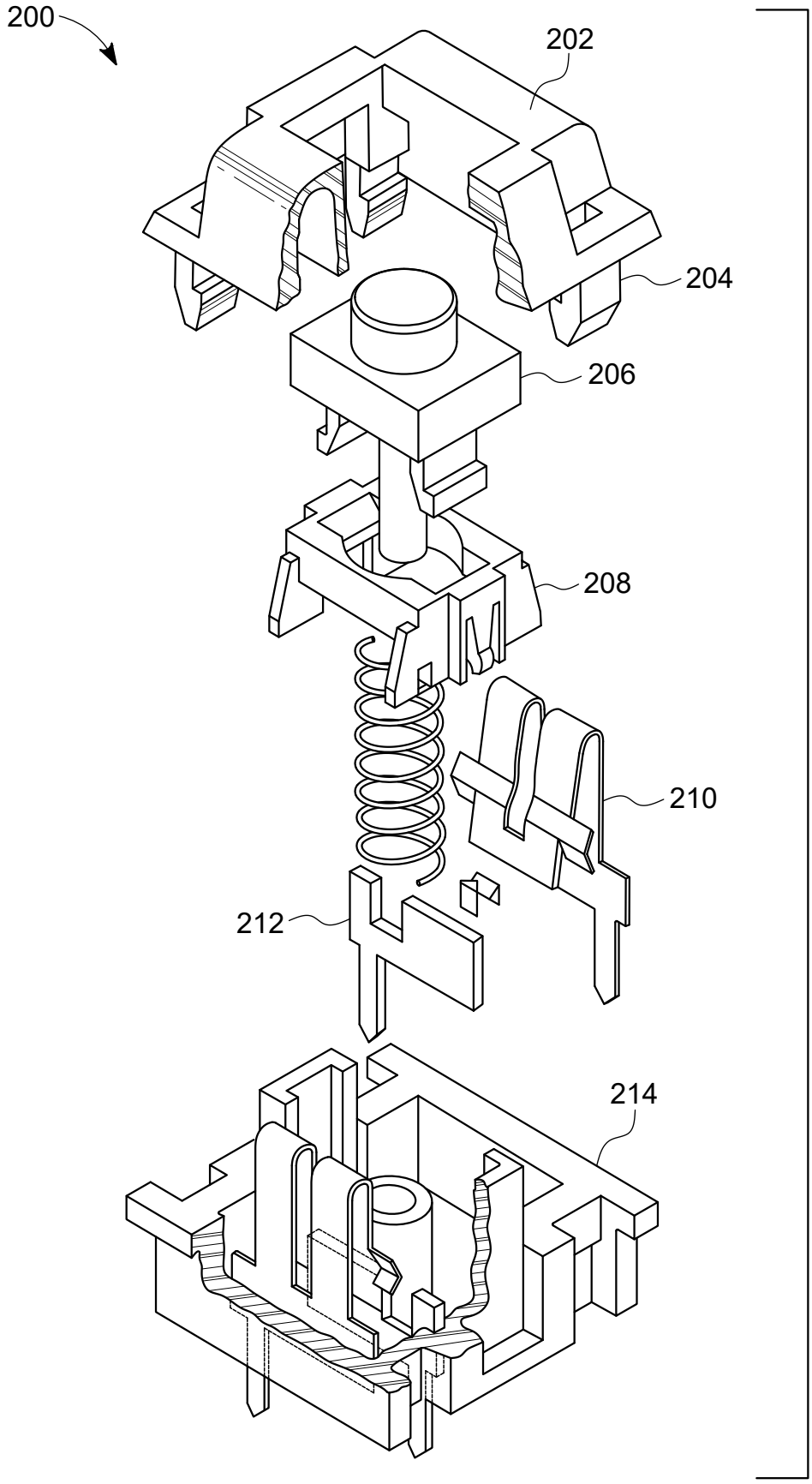

FIG. 2

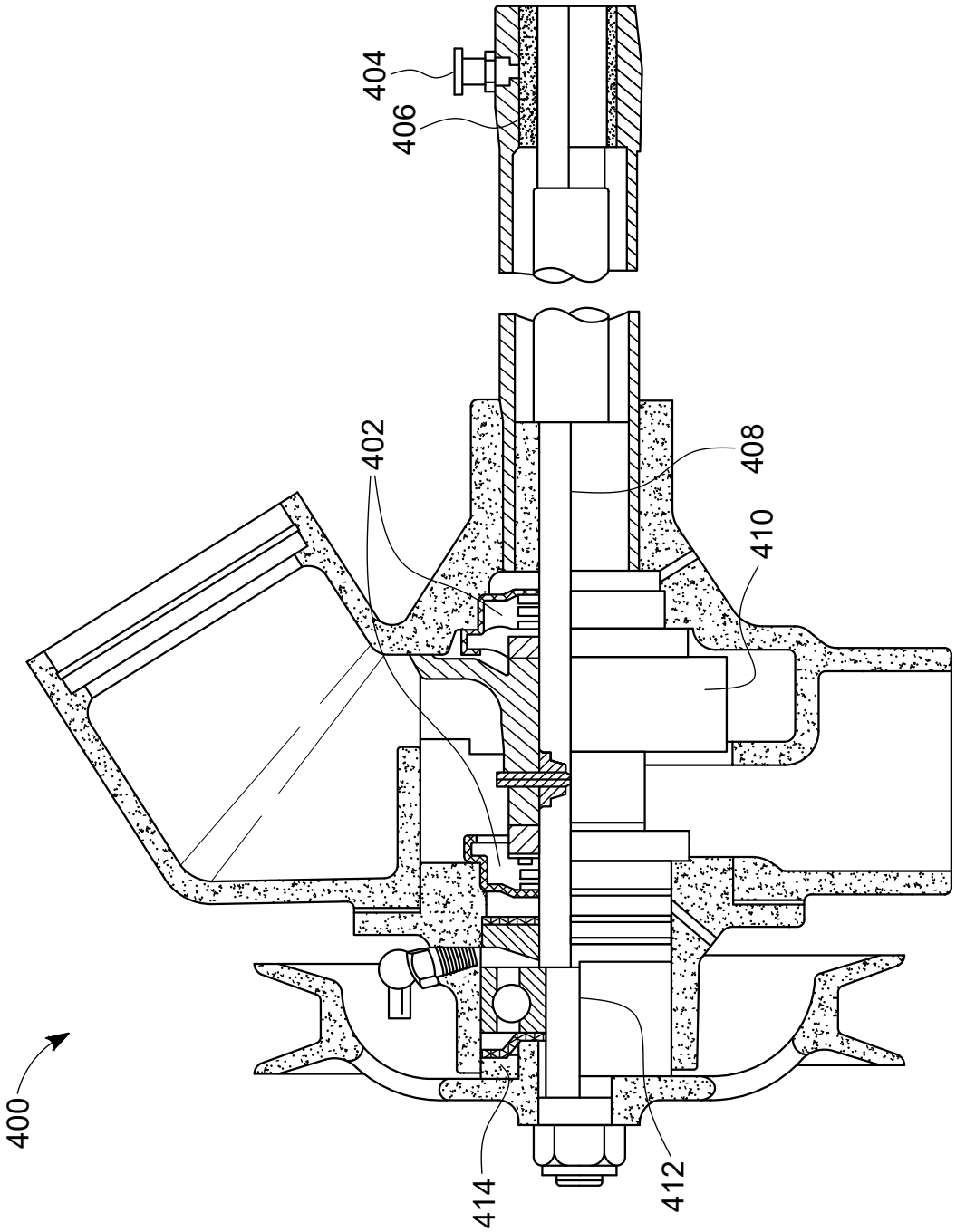

FIG. 4

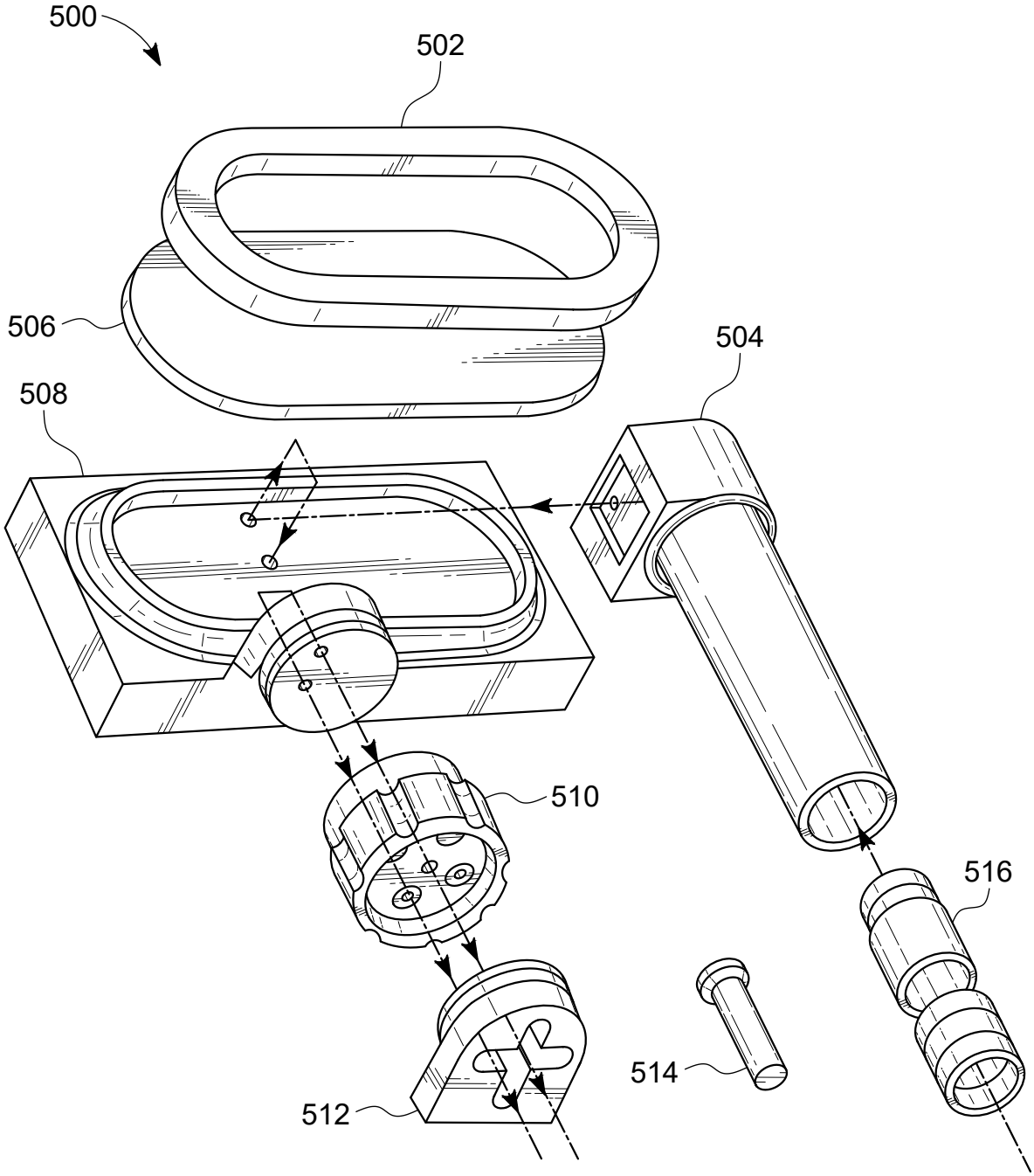

FIG. 5

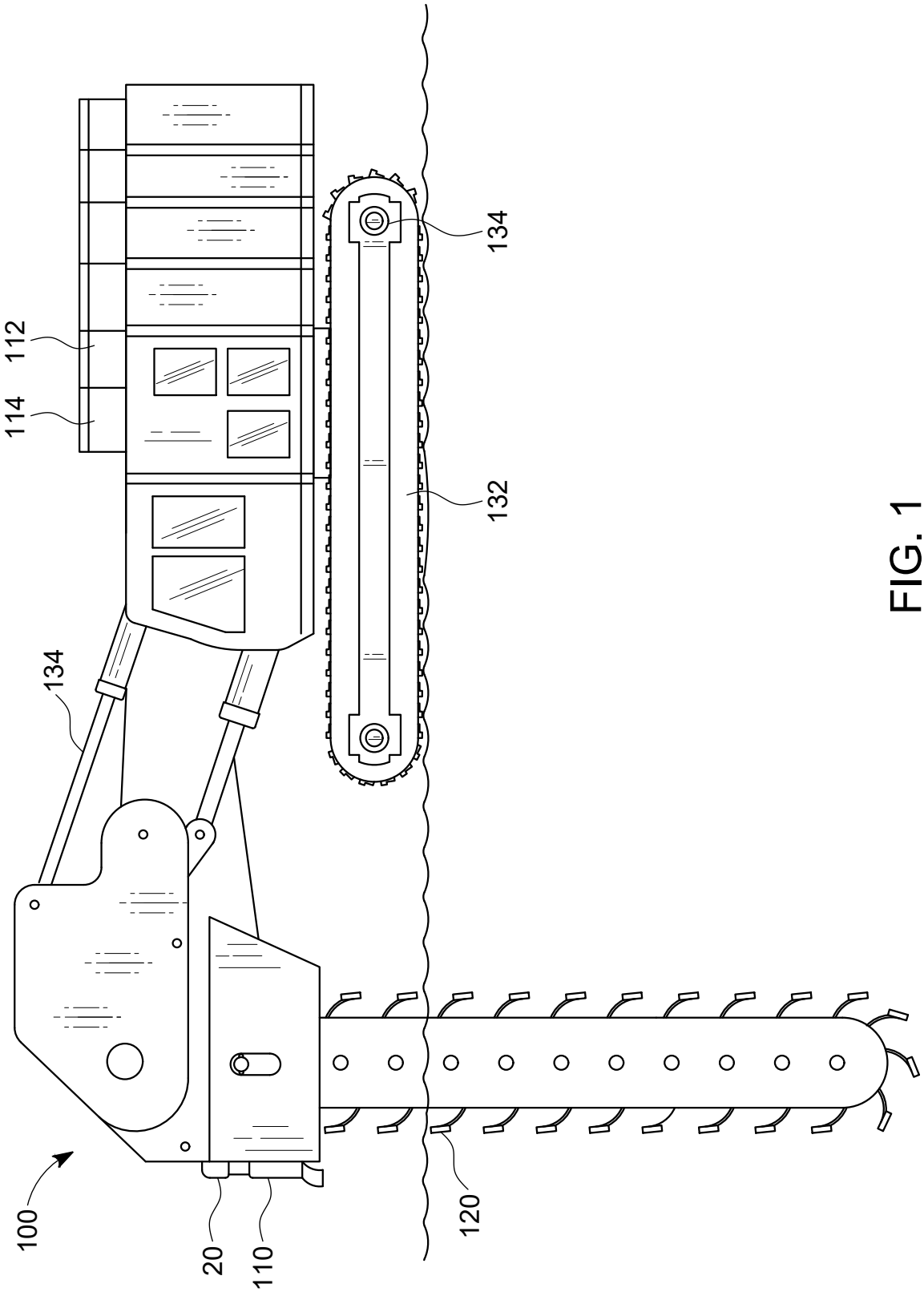

FIG. 1

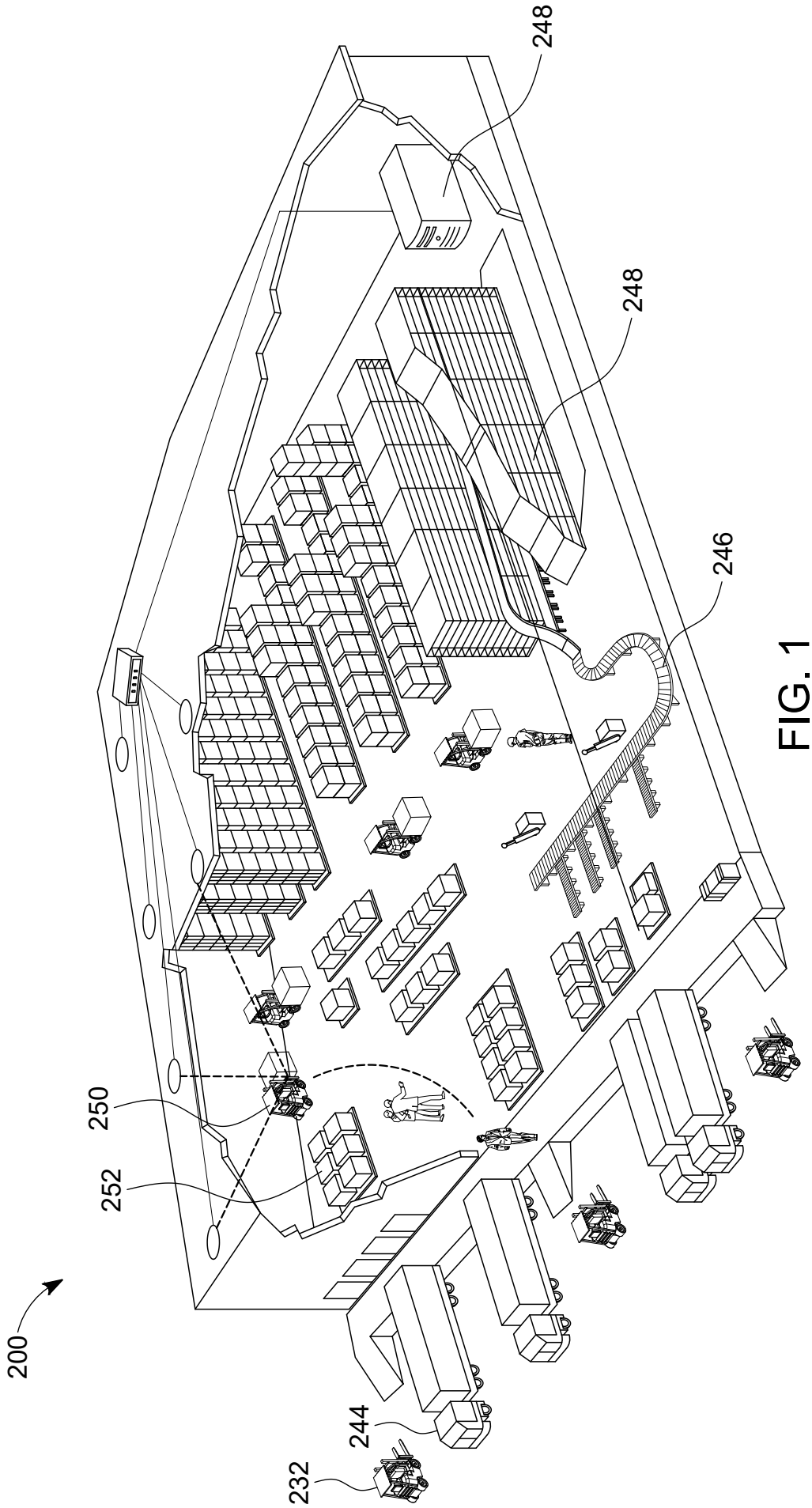

FIG. 1

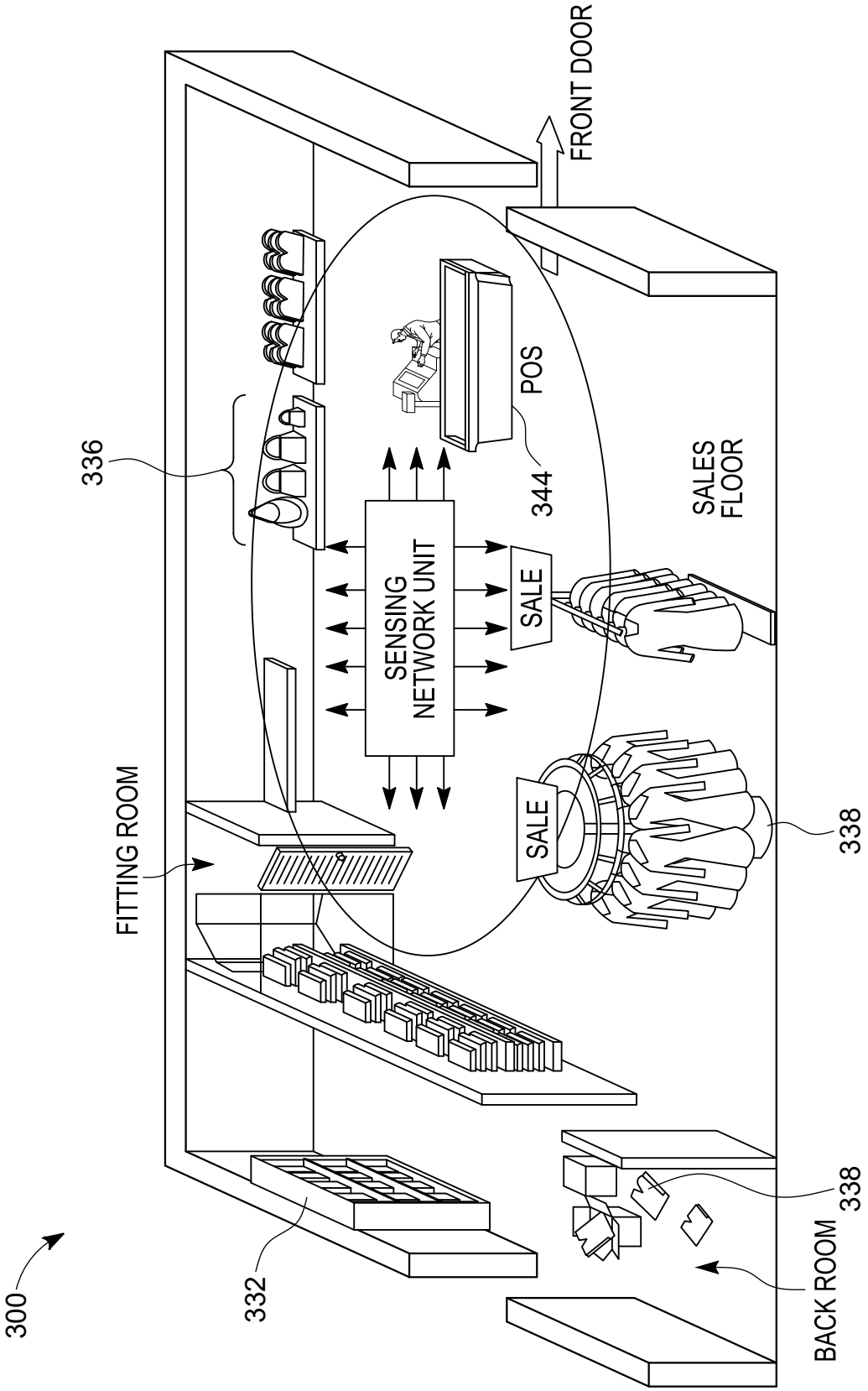
FRONT DOOR
POS
344
336
SENSING NETWORK UNIT
SALE
SALES FLOOR
SALE
338
FITTING ROOM
338
BACK ROOM
332
300

FIG. 1

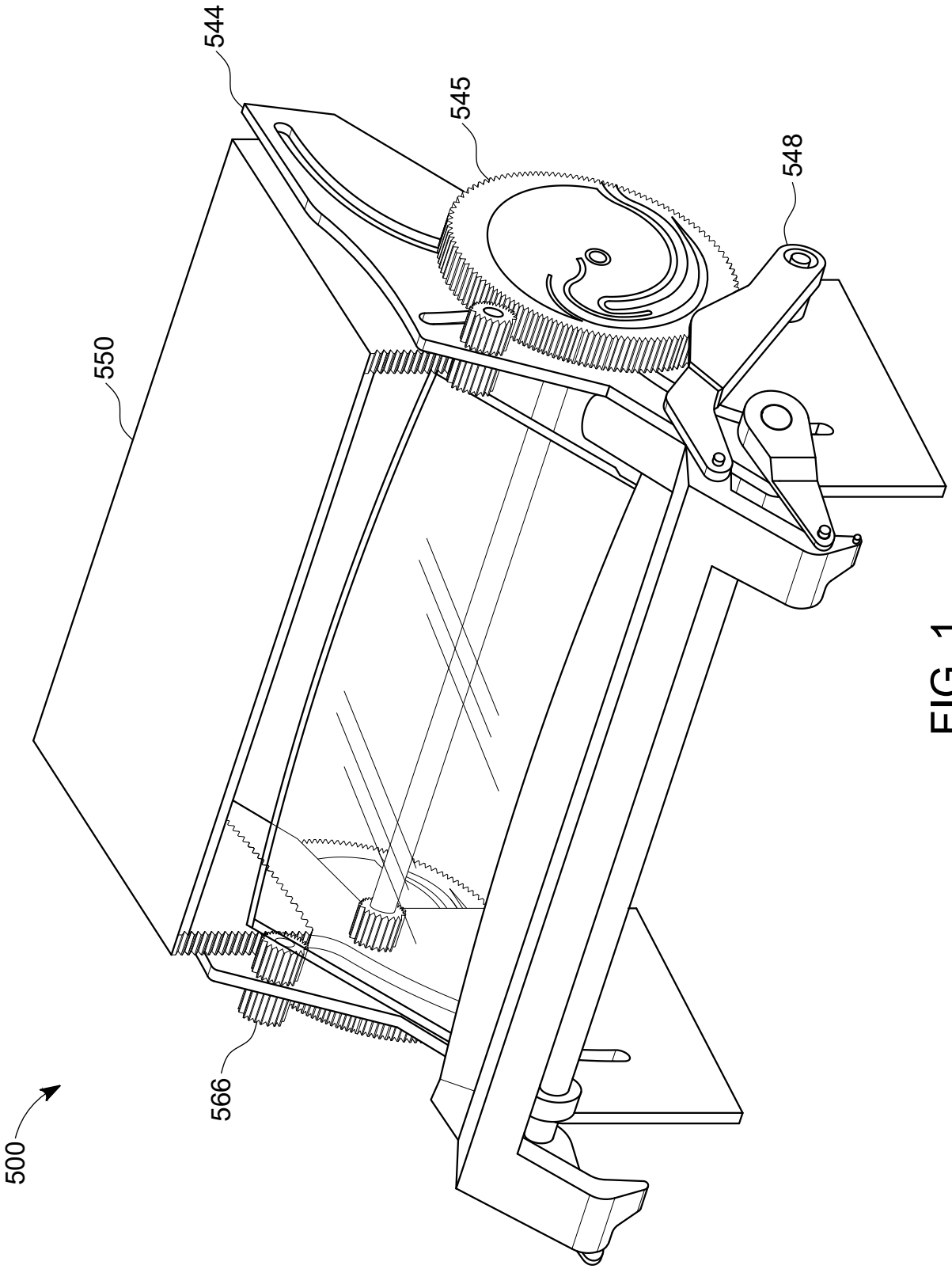

FIG. 1

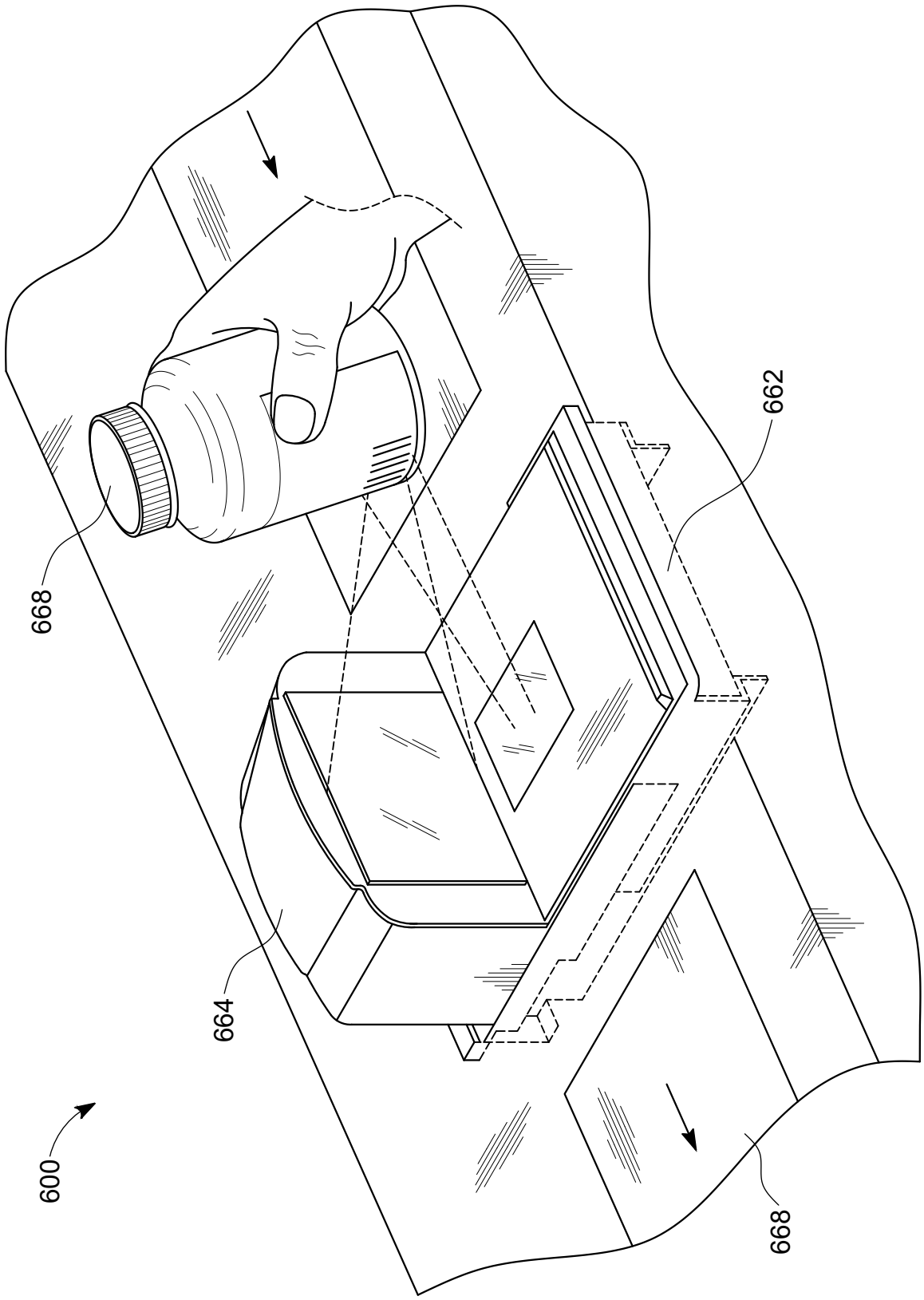

FIG. 1

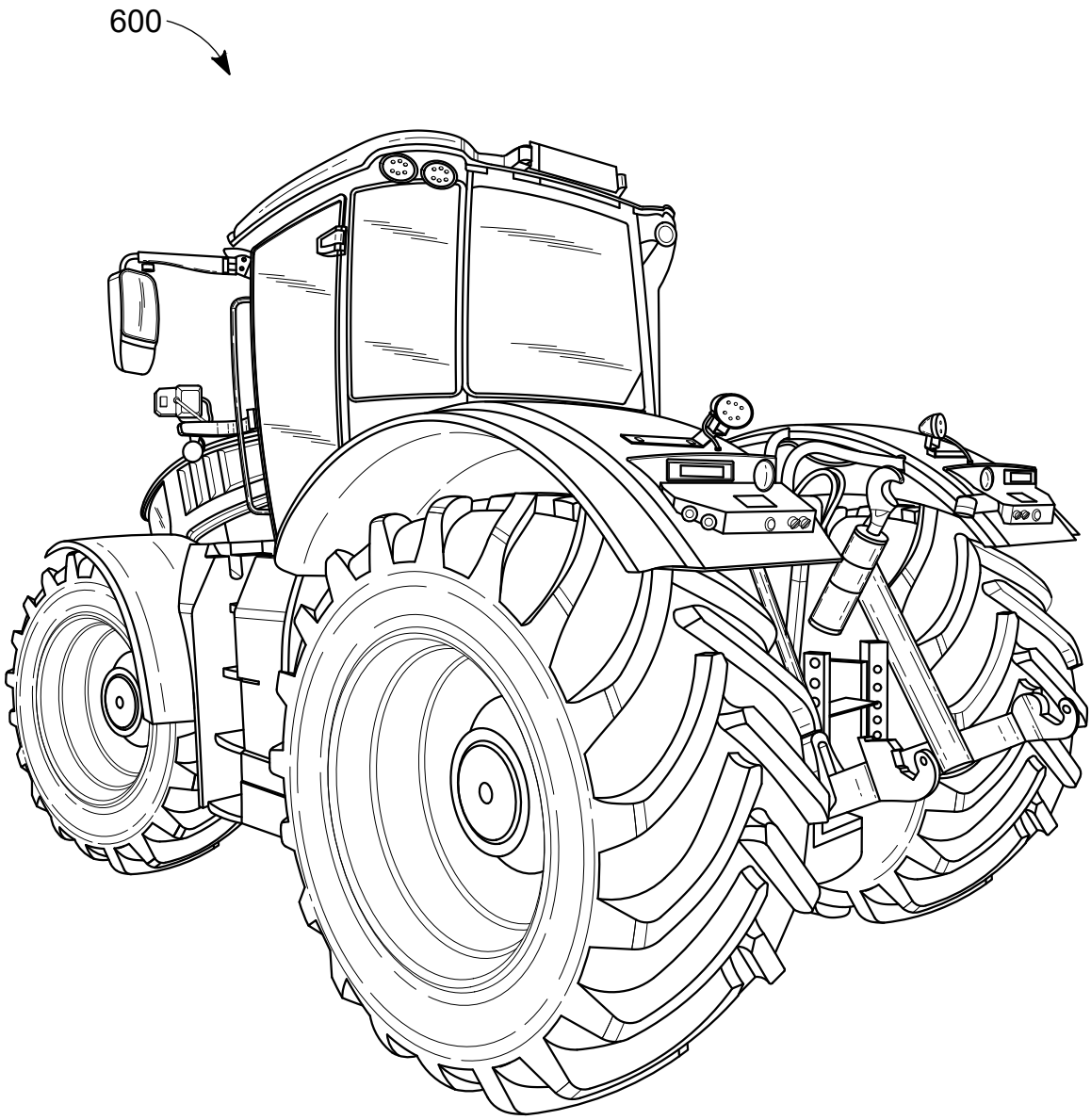

FIG. 6

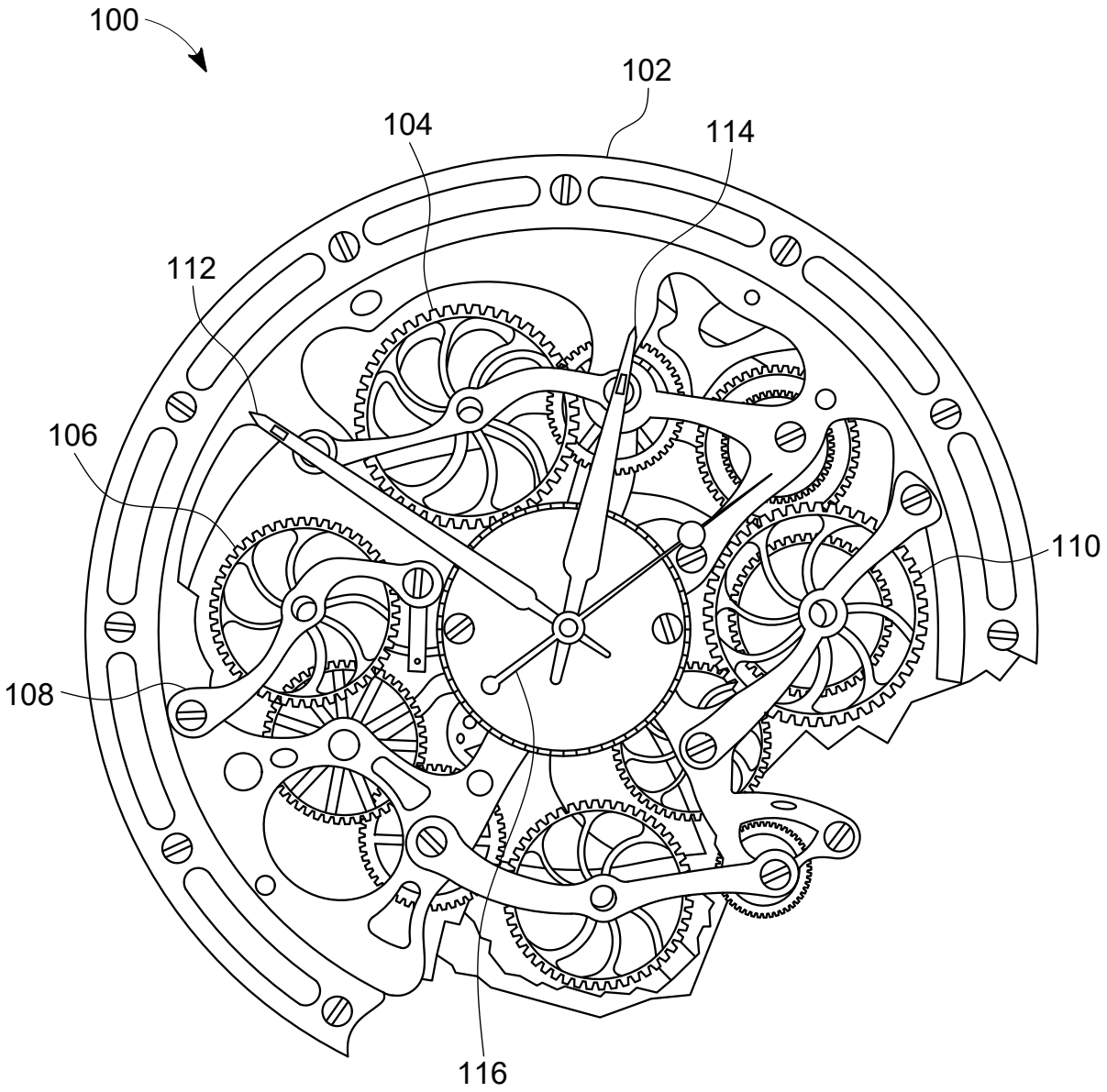

FIG. 1

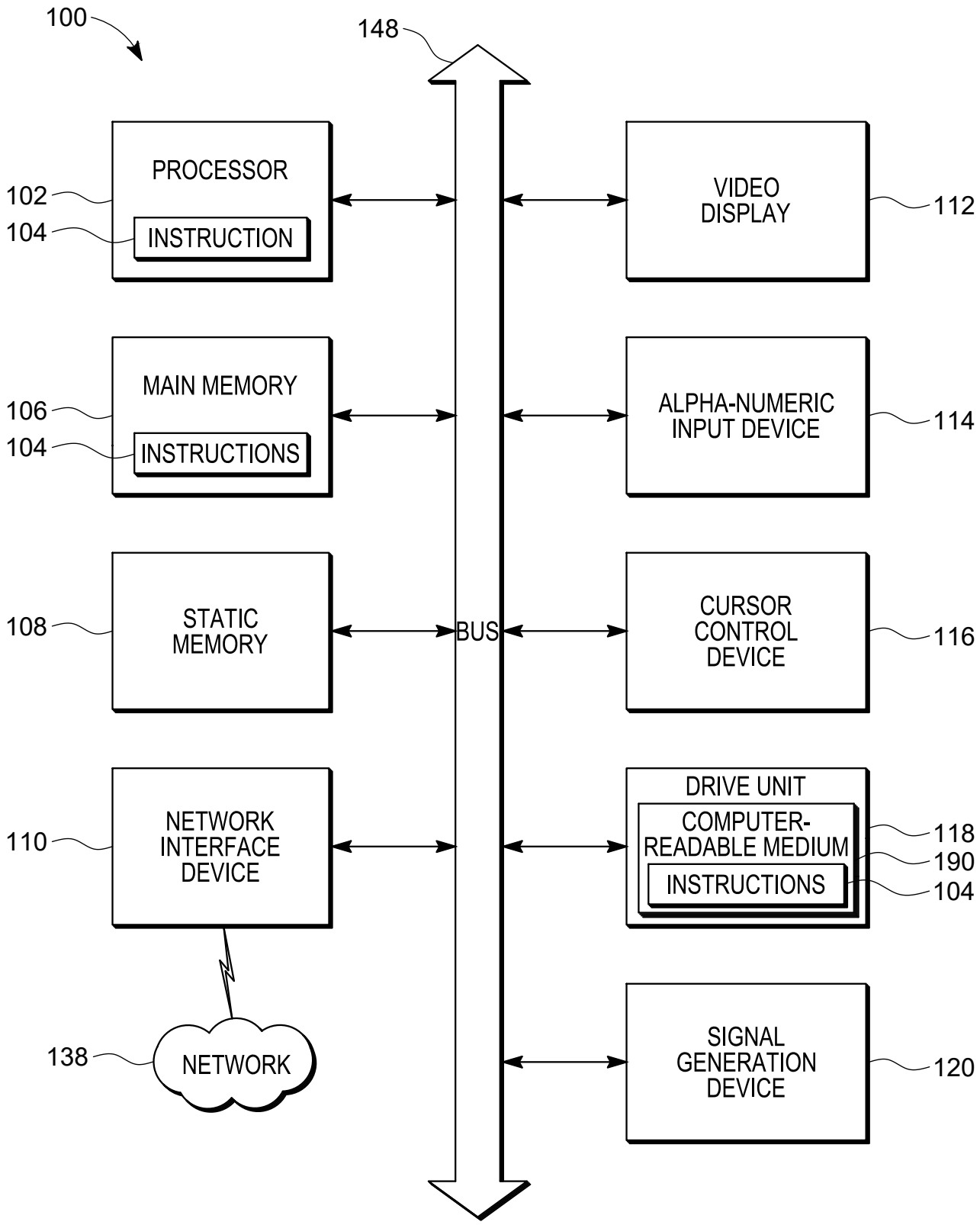
100
148
PROCESSOR
INSTRUCTION
102
104
MAIN MEMORY
INSTRUCTIONS
106
104
STATIC MEMORY
108
NETWORK INTERFACE DEVICE
110
NETWORK
138
BUS
VIDEO DISPLAY
112
ALPHA-NUMERIC INPUT DEVICE
114
CURSOR CONTROL DEVICE
116
DRIVE UNIT
COMPUTER-READABLE MEDIUM
INSTRUCTIONS
118
190
104
SIGNAL GENERATION DEVICE
120

FIG. 1